BARRETT

2019 MIL-SPEC Automatic Tuning HF Antenna

User Guide

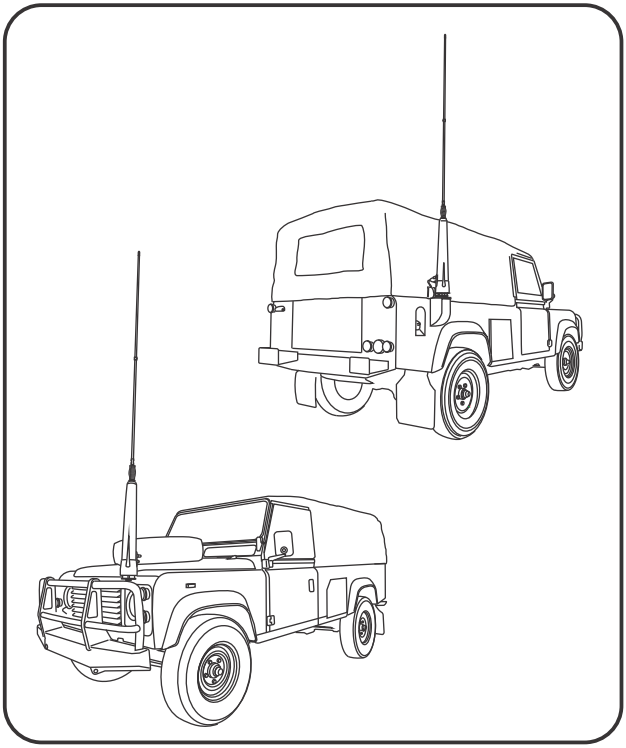

BCM201902/09

Contents

This manual covers the following Barrett products:

Package Number	Components
2019-00-10	2019-00-01 Barrett 2019 Antenna (NATO)
2019 - NATO	4019-00-02 Control cable 6m
	2019-00-03 Fibreglass split whip (2 piece)
	2019-00-04 Standard spring (black)
2019-01-08	GPS option (internal fit) for 2019 package 2019-00-10

Introduction

The Barrett 2019 antenna plugs directly into the "ATU" and "RF" connectors on any Barrett HF transceiver using the cables supplied.

The Barrett 2019 antenna can be fitted with an optional internal GPS. This internal unit can be used to provide GPS data as part of a GPS tracking network without the need to install a separate GPS, thereby simplifying the system installation.

The GPS unit is connected via the integrated coaxial, control and GPS cable supplied with the Barrett 2019 antenna.

When paired with a Barrett 4050 HF SDR Transceiver, the 2019 has memory tune capabilities limiting the transceiver's need to retune an antenna after a channel change. When returning to a previously tuned channel, the 4050 loads the 2019 with a stored tuning result and evaluates the resulting VSWR. If the VSWR is outside acceptable limits, the 4050 will perform a retune.

Please note: On first turn on of equipment, the GPS unit can take up to 10 minutes to acquire Almanac data.

PRC-2090 Tactical HF Transceiver to 2019 Antenna Connection Diagram

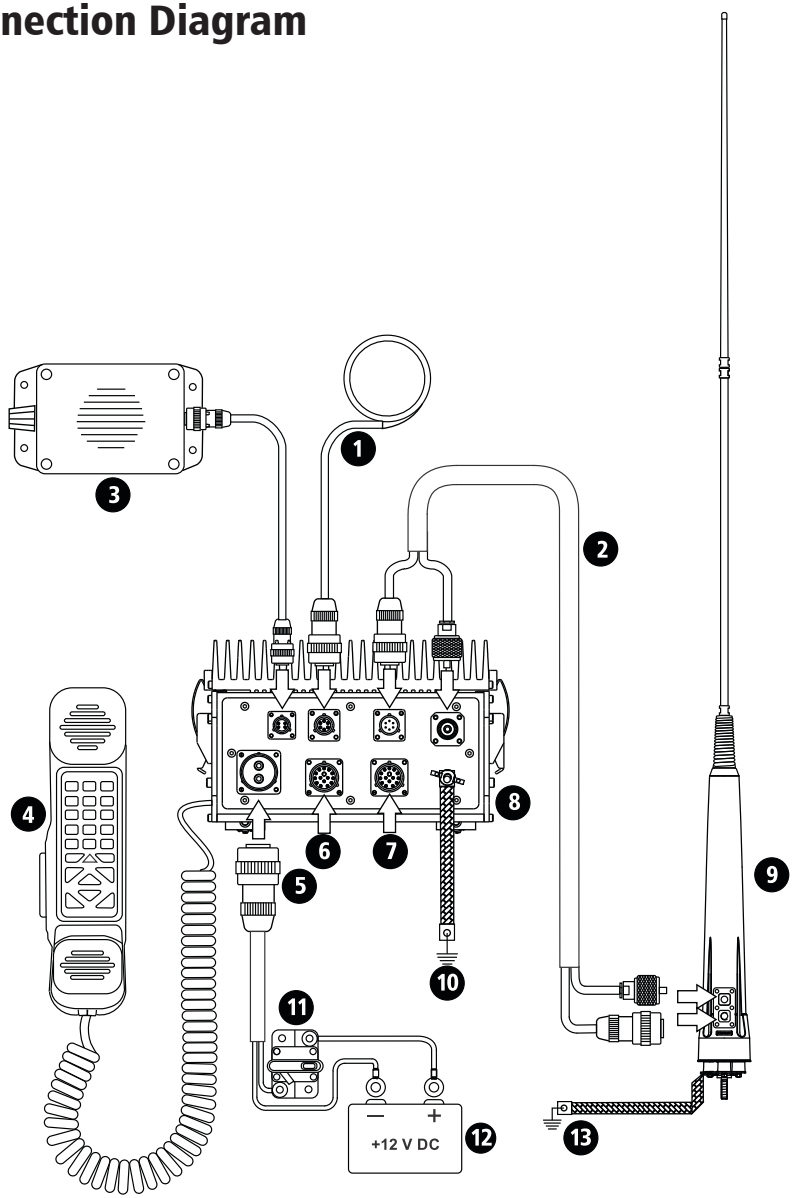

1	External GPS (used if optional internal 2019 GPS unit is not required or fitted)
2	Interface cable – integral coaxial, control and optional GPS connection Auxiliary connector
3	Extension speaker
4	Handset
5	6 metre power cable
6	AUX port
7	Linear Amp port
8	PRC-2090 Tactical HF Transceiver in Mobile configuration
9	2019 MIL-SPEC Automatic Tuning Mobile HF Antenna
10	Earth strap
11	Heavy duty fuse & holder supplied in mobile pack
12	12V DC battery
13	Earth strap

2050 HF SSB Transceiver to 2019 Antenna Connection Diagram

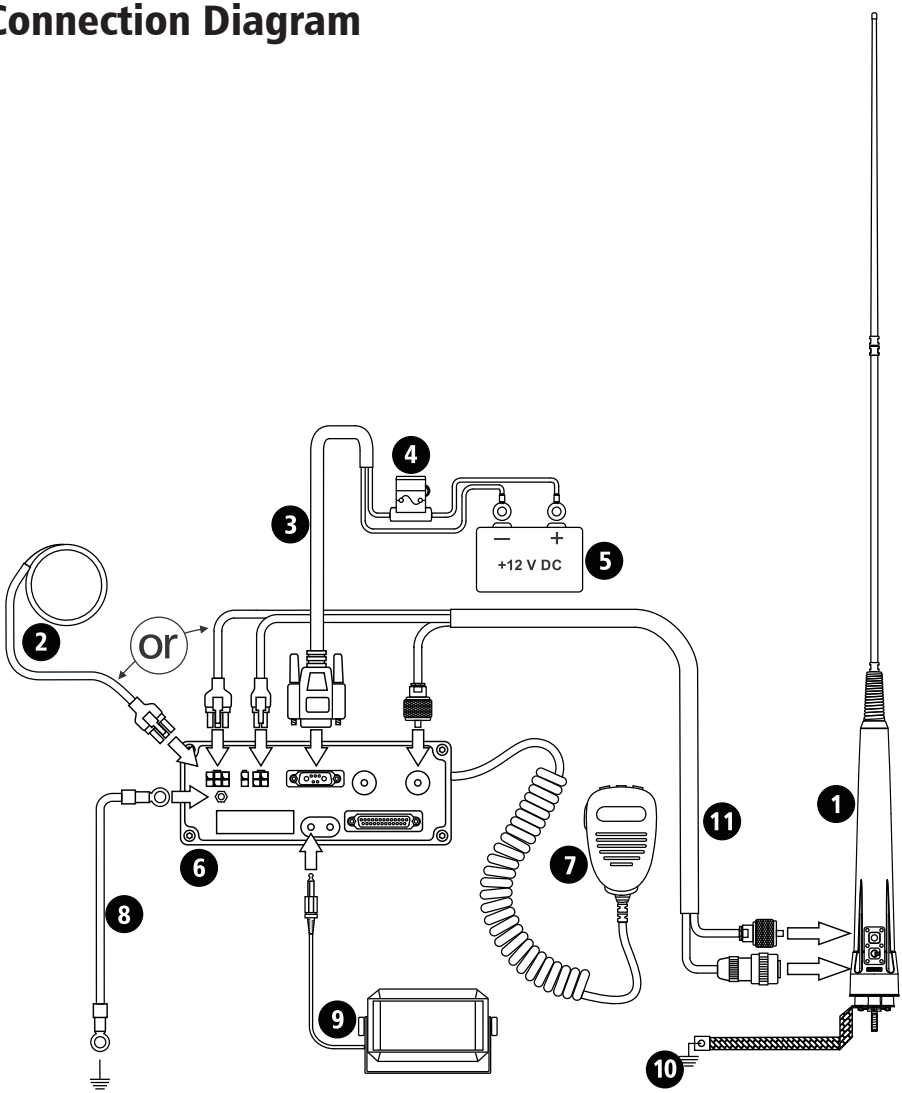

1	2019 MIL-SPEC Automatic Tuning Mobile HF Antenna
2	External GPS (used if optional internal 2019 GPS unit is not required or fitted)
3	6 metre power cable supplied with transceiver
4	Heavy duty fuse & holder supplied in mobile pack
5	12V DC battery
6	2050 HF SSB Transceiver
7	Microphone
8	Earth strap
9	Extension speaker supplied with 2050 Transceiver Connection
10	Earth strap
11	Interface cable – integral coaxial, control and optional GPS connection Auxiliary connector

4050 HF SDR Transceiver to 2019 Antenna Connection Diagram

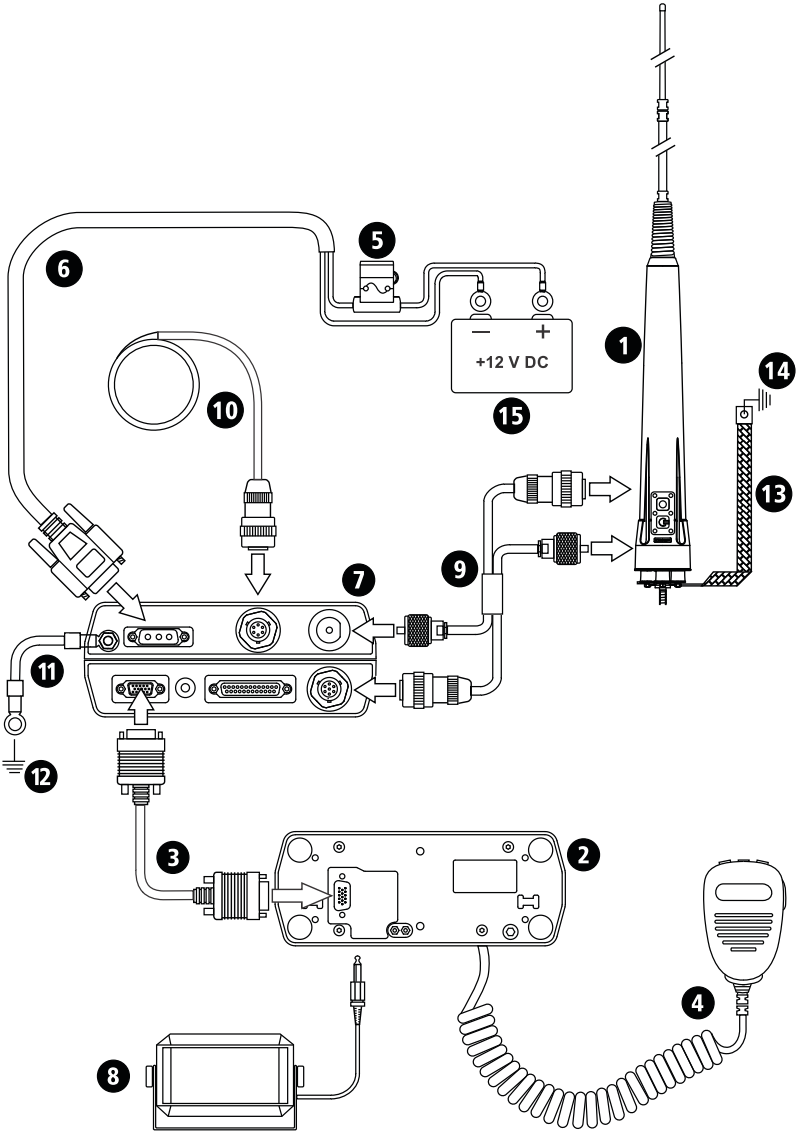

1	2019 MIL-SPEC Automatic Tuning Mobile HF Antenna
2	4050 HF SDR Transceiver control head
3	6 m Control cable
4	Microphone
5	Fuse in-line with spare
6	6 metre power cable supplied with transceiver
7	4050 HF SDR Transceiver
8	Extension speaker supplied with 4050 transceiver
9	Interface cable – integral coaxial, control and optional GPS connection.
10	External GPS receiver option
11	Earth strap between 4050 transceiver and main body of vehicle
12	Earth
13	Earth strap between 2019 ATU and main body of vehicle
14	Earth
15	12 V DC external battery

Connection Details for a PRC-4090 Transceiver with Mobile Pack and 2019 Automatic Tuning Mobile HF Antenna

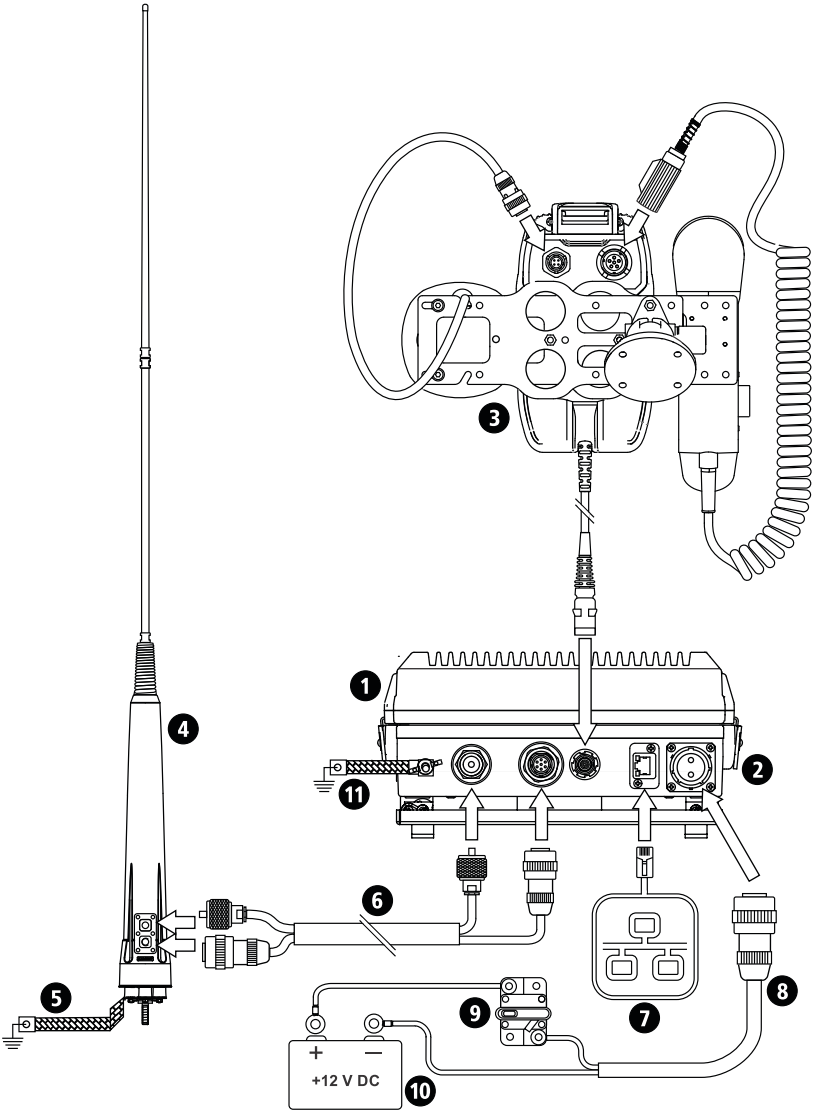

1	Barrett PRC-4090 HF SDR Transceiver (P/N 4090-00-01)
2	PRC-4090 System Docking Station (P/N 4090-05-00) and Anti-Vibration Mounting Plate (P/N 4090-05-07)
3	PRC-4090 Control Handset (P/N 4090-01-09) and Control Handset Docking Station (P/N 4090-05-03)
4	Barrett 2019 MIL-SPEC ATU HF mobile antenna - NATO green (P/N 2019-00-11)
5	Ground (earth)
6	Interface cable 6 m - integral coaxial/control with connectors to suit 4090 SDS (P/N 4019-00-02)
7	IP Network Connection via RJ45 cable
8	3 metre battery back-up cable for PRC-4022 Power Supply (P/N 4090-06-08)
9	Circuit Breaker
10	12 V Battery
11	Ground (earth)

Mounting the Barrett 2019 MIL-SPEC Automatic Tuning Mobile HF Antenna

The Barrett 2019 antenna should be mounted in positions similar to those illustrated in the diagrams on the following pages. Select a position free from excessive vibration. A bracket, fabricated to withstand the forces and vibration that can be expected during off-road driving, should be used to mount the antenna to the vehicle. When locating the mounting position for the antenna, ensure that the antenna body, when flexing on its vibration mount, cannot come into contact with other parts of the vehicle. The antenna should be mounted as far from surrounding objects on the vehicle as possible.

The antenna is supplied standard with two sections (Barrett P/N: BCA201901), a bulb spring (P/N 2019-00-04), an antenna installation guide and a pre-terminated six metre control cable to suit the Barrett 2019 antenna to transceiver.

The following extension cables for the control cable, are also available:

Extension Cable	Barrett P/N for the 2050	Barrett P/N for the 4050/4090
6 m	BCA201904	4019-00-02
10 m	BCA201905	

The control cable should be routed into either the engine compartment or boot (trunk) of the vehicle. If the joint between the antenna control cable and the extension cable is in an exposed position, a rubber self-amalgamating tape should be used to seal the joint. Do not wrap this joint if it cannot be made completely water tight as water will collect in the joint and cause it to corrode.

A good earth (ground) to the main body of the vehicle is essential for efficient operation of the antenna. To achieve this, clean all joints to bare metal and use additional copper braid earth straps if any non-metallic joints are encountered.

After mounting the main body of the antenna, screw the black base spring onto the antenna body followed by the whip section.

Note: If the antenna is being fitted to a rear door, extra bonding straps should be added from the rear door to the main body / chassis of the vehicle.

Important Information

It is ESSENTIAL to maintain the minimum clearances between the antenna and surrounding metal work as indicated in the diagrams. FAILURE TO MAINTAIN THESE CLEARANCES WILL NOT ONLY REDUCE THE EFFICIENCY OF THE BARRETT 2019 AUTOMATIC TUNING MOBILE HF ANTENNA BUT MAY ALSO LEAD TO INTERNAL RF ARCING AND FAILURE.

Important:

Considerations on the overall height of the 2019 antenna once fitted should also be considered.

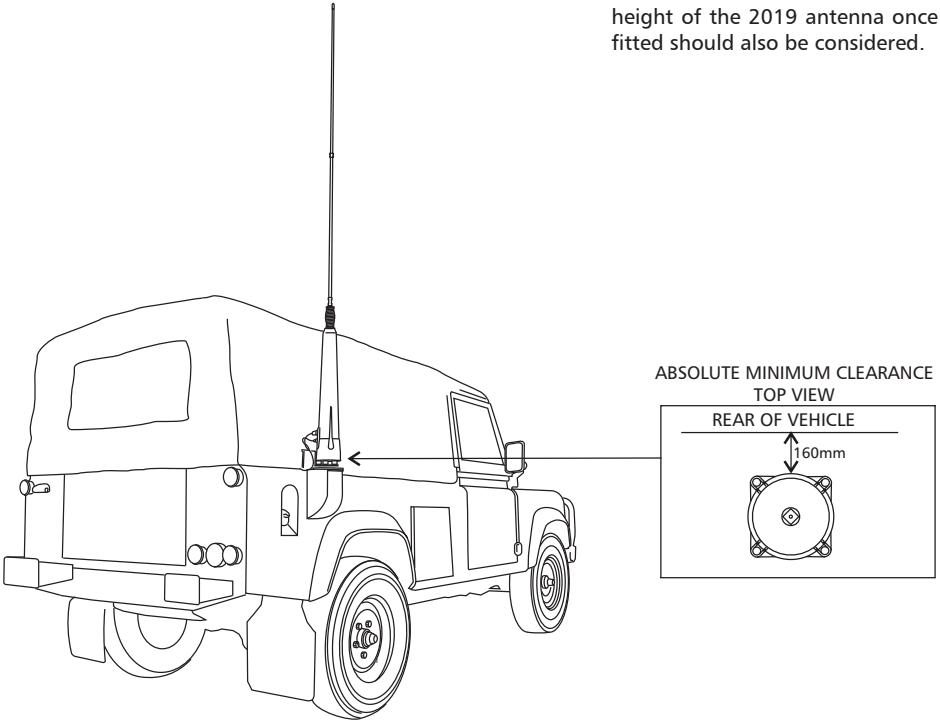

Important:

Please note that the mounting of a 2019 antenna on the front of a vehicle may be considered illegal in some areas / countries. Please check with your local transport / vehicle authority prior to installation on the front of your vehicle.

Considerations on the overall height of the 2019 antenna once fitted should also be considered.

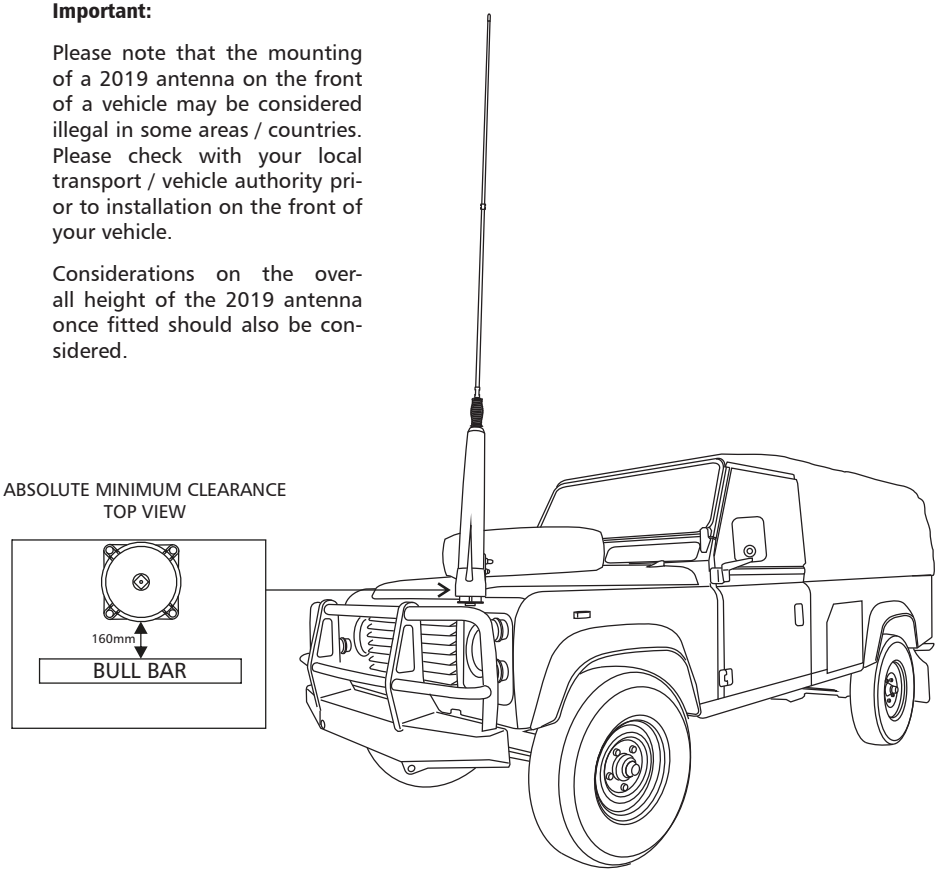

Caution:- Whilst the 2019 automatic tuning mobile HF antenna is designed to withstand vibration to military specifications on tyred vehicles, some mounting positions on large prime-movers, particularly front mounted bull bars, are subject to vibration that far exceeds this specification. Do not mount the 2019 antenna in positions such as these as damage to the antenna may result.

Earthing the Antenna

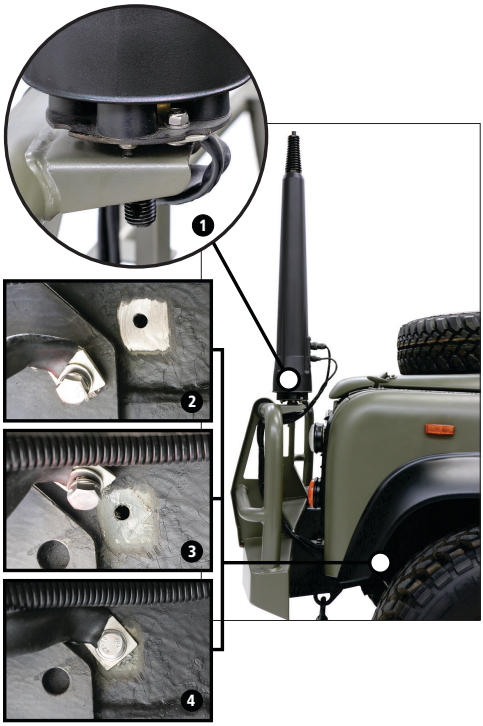

Notes:

1. Connect an earth strap to the base of the antenna
2. Grind away any paint or coating at the earthing point on the chassis to expose the bare metal
3. Apply electrical contact grease to prevent rust and corrosion and maintain the integrity of the earth connection
4. Attach the earth strap lug securely with an appropriate fastener.

IMPORTANT: If the antenna is mounted in a high position on the rear door of a vehicle, multiple earth straps must be used to reach the vehicle chassis' earthing point. Earth conductivity from the antenna to the chassis must be maintained for correct operation of the antenna.

Mounting the Base Spring

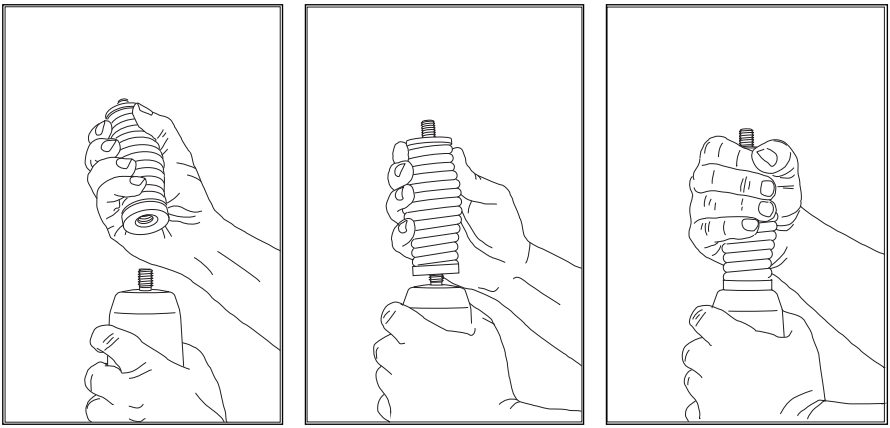

The base spring should only ever be tightened by hand. If a tool is used it may damage the spring base.

Mounting the Whip Sections

To mount the whip section it is recommended that only one section of the whip be screwed onto the antenna at a time. The whip section should be hand tightened fully then a suitable tool (e.g. a spanner) can be used to tighten the section a further 10 to 20 degrees clockwise while holding the antenna body with a free hand.

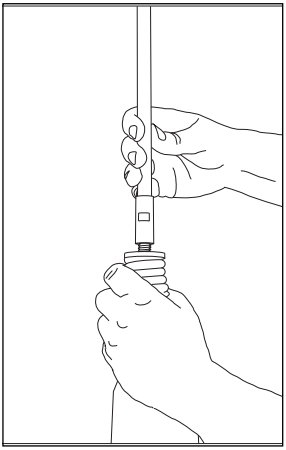

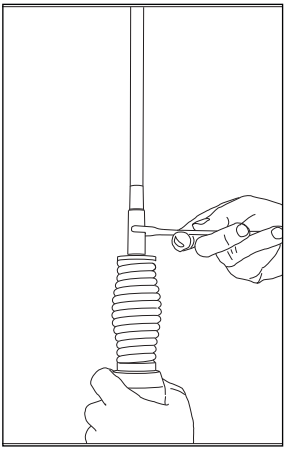

To mount the two whip sections together, the unattached whip section should be hand tightened fully then a suitable tool (e.g. a spanner) can be used to tighten the section a further 10 to 20 degrees clockwise while holding the already attached whip section with a free hand.

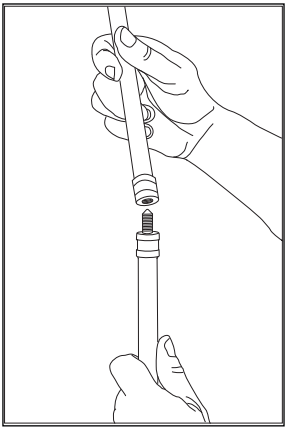

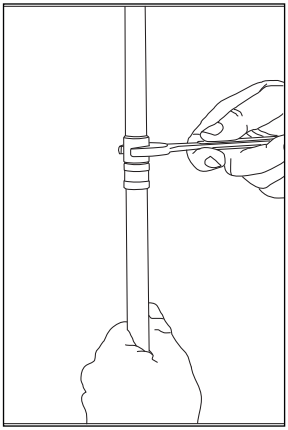

Transceiver Settings

2050/PRC-2090

When using a 2019 with a 2050 HF SSB Transceiver, **the antenna setting must be set to 2019.**

1. Go to [Protected Menu], [I/O Settings], [Antenna Type], then press .
2. Use the scroll keys to select 2019 Mobile antenna.
3. Press to confirm.

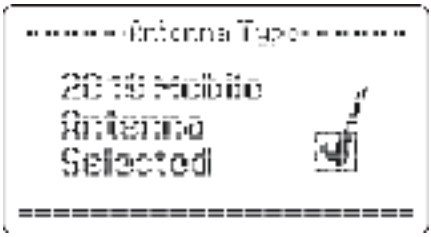

4050

When using a 2019 with a 4050 HF SDR Transceiver, the **Antenna 1 Type should be set to 2019 Mobile Antenna.**

1. From the Settings menu, select I/O.
2. Select the Antenna 1 sub-menu.
3. Select 2019 Mobile Antenna option.

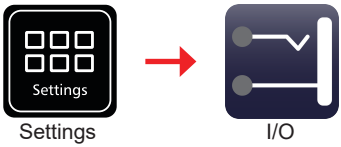

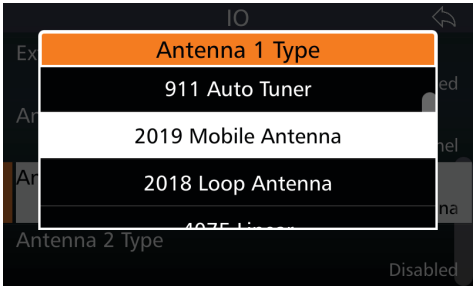

Testing the 2019 Automatic Tuning Mobile HF Antenna

To test the Barrett 2019 antenna, first select the lowest transmit frequency in the transceiver and tap **Tune**. The display should show the word "Tuning" for a few seconds, followed briefly by "Tune Passed" and an indication of the measured VSWR (Voltage Standing Wave Ratio) value. Check this reading against the VSWR meter.

Repeat the above test on the highest frequency in the transceiver and on a selection of frequencies in between at approximately 2 MHz intervals. If the tune passes at all times, the 2019 antenna is working correctly.

The 2019 antenna tunes to maximise whip current, not minimise VSWR, but the displayed VSWR value should generally be between 1.0:1 and 2.0:1.

However, if the display shows "Autotune Fail" accompanied by low pitched beeps at any point, the 2019 antenna has failed to tune.

Check the following:

- Confirm the "Antenna Type" is selected in the transceiver's Antenna Type setting (see previous page).
- Check all cables are correctly connected
- Check the earth cable from the base of the 2019 antenna have a good connection to the vehicle body or chassis (not directly to the battery terminal)
- Check that the whip fitted is not faulty or incorrect
- Move the vehicle if the 2019 antenna is close to any metal fences, buildings etc.

If the problem cannot be resolved, contact your dealer or Barrett Service Department for advice.

Propagation

Horizontal and vertical propagation charts are displayed below. These display ideal propagation patterns that may not apply to all situations.

Horizontal Plane

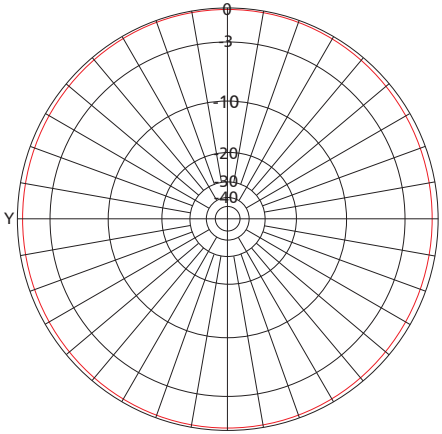

Vertical Plane

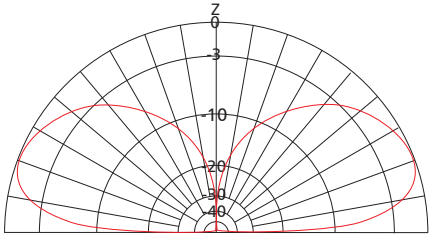

Specifications

Standards	Complies with MIL-STD 810G for drop, dust, temperature, shock and vibration
Frequency Range	2 MHz to 30 MHz (continuous)
Power Handling Capability	150 W PEP (max)*
VSWR	Better than 2:1 when tuned
Tuning Time	Less than 1.5 seconds (typical)
Operating Temperature	-30°C to +60°C
Humidity	95% relative, non-condensing
Environmental	IP67 immersion 1 m for 1 hour
Supply Voltage	12.6 V DC (derived from transceiver)
Antenna Impedance	50 ohm unbalanced
Mounting	M16 stud with provision for padlock
Input Current	Average 80 mA @ +12.6 V input
Shock	MIL-STD 810G Method 516.6
Vibration	MIL-STD 810G Method 514.6

* Please note that older model 2019 antennas (earlier than serial number 201910000) have a power handling capacity of 125W PEP.

Warranty Statement

Barrett Communications (hereafter referred to as 'Seller') provides a three (3) year warranty on all Barrett products from the date of shipment from the Seller. A one (1) year warranty from the date of shipment from the Seller is provided for all batteries.

Each warranty guarantees acceptable performance of the product under normal recommended conditions for the duration of the warranty period. In cases of accident, abuse, incorrect installation or maintenance by a non-Seller representative, subjection to abnormal environmental conditions, negligence or use other than those in accordance with instructions issued by the Seller, the warranty shall be voided. In addition, this warranty shall not cover low performance – specifically the distance or quality of transmission and reception - due to unfavourable environmental or locational conditions. Nor shall this warranty cover the quality of transmission and reception of transceivers mounted in vehicles or vessels that have not been sufficiently electrically suppressed.

Should any fault due to bad design, workmanship or materials be proven at any time within the warranty period, the Seller will rectify such fault free of charge provided that the equipment is returned, freight paid, to Barrett Communications Pty Ltd head office or to an authorised service centre. The repaired or replaced product will remain covered under and throughout the term of the original warranty period up to its expiration. No repair or replacement will extend the warranty term past the original thirty-six (36) month anniversary of the original date of shipment from the Seller.

Firmware and software (pre-installed, stand-alone or provided as an update), hereafter referred to as 'Software', is guaranteed to perform acceptably within the specifications provided by the Seller, provided that the Software is within the warranty period.

Should Software not perform acceptably, the Seller will use all commercially reasonable efforts to correct such nonconformity as reported to the Seller directly or via a support representative. The Seller is not obliged to update Software under warranty if the nonconformity is caused by a) the use or operation of the Software in an environment other than intended or recommended by the Seller in relevant documentation, or b) modifications made to the Software not authorised or undertaken by the Seller or a representative of said Seller.

Subject to the matters set out in this warranty, no liability, expressed or implied is accepted for any consequential loss, damage or injury arising as a result of a fault in the equipment and, all expressed or implied warranties as to quality or fitness for any purpose are hereby excluded.

This warranty does not extend to products supplied by the Seller which are not designed or manufactured by it. The Seller will however make every endeavour

to ensure that the purchaser receives full benefit on any warranty given by the original equipment manufacturer.

This warranty is restricted to the original purchaser except where the original purchaser is a reseller authorised by the Seller who has purchased for the purpose of resale, warranty shall be extended to the reseller's customer.

Contact Details

Our customer / dealer technical support department can be contacted via land mail, email, telephone or via support ticket on the technical support web page.

https://www.barrettcommunications.com.au/support/

Barrett Communications Pty. Ltd Head Office:

PO Box 1214, Bibra Lake WA 6965 AUSTRALIA

Toll Free Tel: 1800 999 580 (Within Australia)
Tel: +618 9434 1700
Fax: +618 9418 6757
email: support@barrettcommunications.com.au

Telephone support from the Australian office is available from 7:30 am to 4:00 pm local time Monday to Friday.

Barrett Communications – Europe:

Unit 9, Fulcrum 2 Victory Park, Solent Way,
Whiteley Hampshire PO15 7FN United Kingdom

Tel: +44 (0) 1489 880 332
Fax: +44 (0) 1489 565 422
email: support@barrettcommunications.co.uk

Telephone support from the UK office is available from 8:30 am to 5:00 pm local time Monday to Friday.

Barrett Communications USA Corp.:

90 Office Parkway

Pittsford, N.Y. 14534

Tel: +1 585 582 6134

email: support@barrettusa.com

Telephone support from the USA support office is available from 8:30 am to 5:00 pm local time Monday to Friday.

Head Office:

Barrett Communications Pty Ltd
47 Discovery Drive, Bibra Lake, WA 6163 Australia
Tel: +61 8 9434 1700 Fax: +61 8 9418 6757
Email: info@barrettcommunications.com.au
www.barrettcommunications.com.au

Europe:

Barrett Communications - Europe
Unit 9, Fulcrum 2, Solent Way, Whiteley, Hampshire, PO15 7FN United Kingdom
Tel: +44 (0) 1489 880 332 Fax: +44 (0) 1489 565 422
Email: uksales@barrettcommunications.co.uk

USA:

Barrett Communications USA Corp.
90 Office Parkway, Pittsford, NY 14534 United States of America
Tel: +1 585 582 6134
Email: sales@barrettusa.com